Access Monitoring for Distributing Systems exemplified by a Manhole Cover Monitoring Y-UV

Product Information PI 51.21-00
Edition 9.13

Table of Contents

Klaschka Industrieelektronik GmbH
Am Zeller Pfad 1
D-75242 Neuhausen
Fon +49 7234 79-0
Fax +49 7234 79-112
e-mail: sales@klaschka.de
www.klaschka.de

1. Introduction

In distributing systems for oil, district heating, gas, water and electricity little was done in the past for the safety of these sensitive facilities. In particular with regard to potential terror attacks there is an increased need for action.

The nodal points of a distributing system are especially endangered and have to be monitored in particular as well as the pump- and transfer stations of gas and fluids. The risk that these vulnerable points, in particular distributed systems with remote control technology, are attacked, cannot be eliminated. The damage can be minimised, however, if the assault is recognised in time.

For this it is necessary that an unauthorised access to such systems is safely recognised and thus a fast reaction to the intrusion or the damage of such facilities can take place.

Apart from switching-off the leads or pumping stations the defence measures can be initiated immediately. This is possible since the location of the attack is known due to the monitoring system. A fast intervention can prevent even a damage of the facilities and the endangerment of humans and material in the case of vandalism.

For this a monitoring system is required which is manipulation-safe and cannot be overcome by simple means.

The access monitoring system requirements are very high. On the one hand it must be insensitive to dirt, humidity as well as high- and low temperatures; on the other hand the manipulation safety is of essential importance. There is the request for the ability to connect the system to remote control systems and to supply it with energy from there.

If no remote control system is present, the monitoring system has to run as a stand-alone system and be supplied by battery and solar-, wind- or a turbine generator. The transmission of the access data can then take place via GSM-modem.

The high manipulation safety is ensured by the use of the RFID-technology. A “duplicate key” is producible only by the manufacturer since the code cannot be decoded externally. If doors and/or accesses to such facilities are opened, this will never remain unnoticed.

In the following the monitoring system is introduced by the example of a manhole cover monitoring.

Fig. 1: Water reservoir with power plant

Fig. 2: Standard manhole cover

Fig. 3: Water supply manhole

2. Application

Manhole cover monitoring systems serve for the monitoring and control of unsecured manhole covers of wells, water supply- and distributing systems, telecommunication- and process-related facilities.

An outstanding characteristic is the non-contacting detection of the cover position by means of a manipulation-safe actuating element as well as the authorisation of the access by way of a so-called code mark.

By means of switching- and/or data outputs an alarm can be triggered by the remote control- or alarm system on site. Several manhole cover monitoring systems can be connected in series as well as to a station controller. A complete system of up to 15 manhole covers can be allocated over a distance of 10 km.

3. Structure

The basic system of a manhole cover consists of a sensor element, which is attached near the cover to be monitored in the manhole (see Fig. 1). A special coded actuator is attached to the cover. A sensor element with a receiver- and transmission coil is mounted in the manhole underneath the cover. A little further an evaluation device is mounted which contains the evaluation electronics, the control- and communication interfaces as well as a sensor element for the access authorisation.

Up to 15 manhole cover monitoring systems can be connected to one station controller.

The sensor element consists of a sensor coil and the control electronics. Both, the sensor element and the evaluation- and station control devices, are mounted in robust plastic housings with protection type IP65. The sensor coil is mounted in a flexible armoured conduit as means of protection against damage.

4. System Structure

The illustration below shows the schematic structure of a manhole with one and several accesses. The actuating element (3) is attached to the cover. The sensor element (2) is mounted at the side wall of the access.

The sensor element is connected via a lead to an evaluation device (1). Its electronic switching contacts are connected via a communication line (4) to the host- and/or alarm system of the operator. In case that the system has several manhole covers the single evaluation devices communicate with a station controller (5).

Next to the switching outputs there is a 20 mA-line current interface. By means of current sensing several manhole cover monitoring systems can be switched in series by a current loop. The single evaluation devices transmit their individual participant number as well as the alarm status to a superordinated controller.

There the data is collected and processed for the remote control- or alarm system on site. The station controller supports, depending on the respective version, all common communication protocols, e.g. 3964R or Profibus DP, TCP/IP and transmits this information via a communication line (4) to the remote control system. Further communication protocols are available on request.

The person entering the manhole cover authorises him-/herself by a code mark at the sensing face of the evaluating device (1). If this authorisation is missing, an alarm is triggered via the communication line (4) after 60 seconds.

Furthermore widely ramified facilities without remote control systems can be connected to GSM- or GPRS data radio modems which transmit the data collected per radio antenna (6) to the host station of the operator.

For operation of the manhole cover monitoring system a supply voltage of 18 to 30 VDC is required on site.

If no voltage supply is available, voltage supply devices of different technologies are available e.g. solar cells, hydrogen- or methanol-operated gas cells or small turbines.

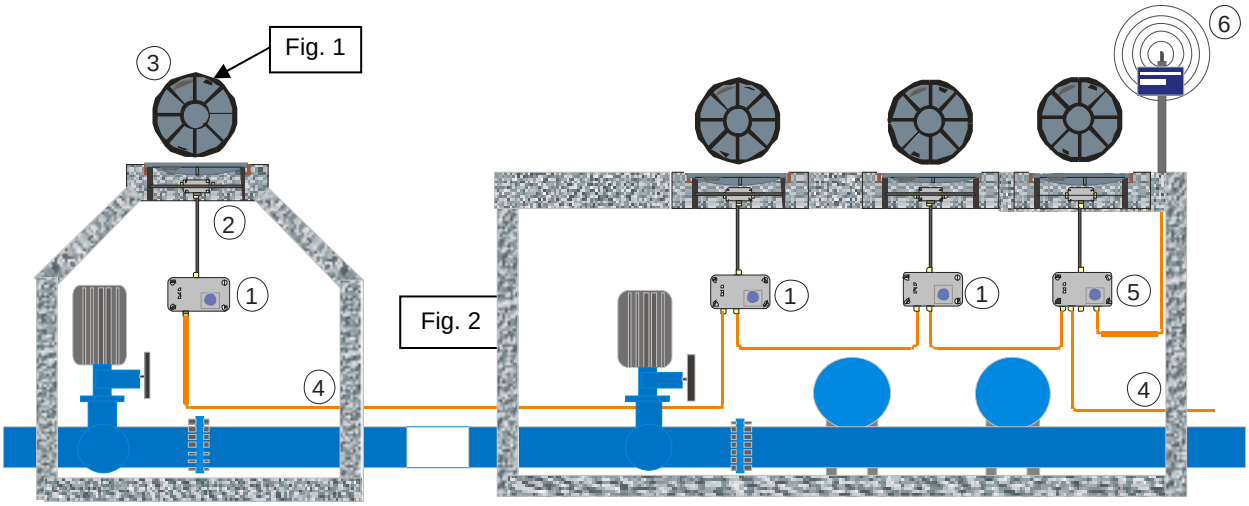

Fig. 4: Schematic structure of a manhole

5. Mode of Operation

The manhole cover monitoring works in connection with the sensor element and the actuating element according to a non-contacting identification principle with a multi-digit safety code. The technology is similar to the immobiliser system in a vehicle (RFID-principle).

The sensor element and the actuating element work together on a non-contacting basis. The identification distance for the actuating element is approx. 5 - 8 cm. Release to the evaluating device is given only as long as the actuating element at the cover is in the response range of the sensor element. The electronic alarm contact is closed.

The evaluation device knows two modes of operation: The static operation and the clocked operation. The static operation is selected if a sufficient distance to other manhole covers is present. If the sensor elements affect each other mutually, then a clocked operation is selected. The operating mode is set by a transponder.

5.1. Evaluation Device

After switching on the supply voltage the device carries out an automatic self-check. The contacts OUT1, OUT2 and OUT3 are opened successively for 1 second. If with the self-check no cover is recognized, an alarm is triggered immediately.

When opening the cover the actuator leaves the operating range and the alarm contact of the sensor element is opened. At the evaluation device the signal contact OUT1 (warning) is opened. Within a certain period of time the opening with a code mark, which is programmed with a special clearing code, at the evaluation device in the manhole must be acknowledged. In this case the alarm outputs OUT2 and OUT3 remain closed.

If the acknowledgement is missing, the alarm contact OUT2 is opened after 30 seconds, after 60 seconds the second alarm contact OUT3 opens.

When closing the manhole cover the monitoring system is armed again and the signal contact OUT1 is closed.

A line current interface is installed alternatively to the switching outputs in order to connect several devices in series. Via this interface the operating conditions of the individual participants are transmitted successively. The evaluation of this data flow takes place in the station controller.

5.2. Station Controller

On the one hand the station controller serves as an evaluation device for a connected sensor element. At the same time the station controller requests and evaluates cyclically feedbacks of participants connected via the integrated line current interface. The power source for the line current interface is integrated in the device. Therefore the station controller must be located at beginning of a series connection. The current loop at the last evaluating device has to be closed by means of a terminating connector.

Via 7 relay exits, both, a collective status report and the participant number are read out, which reports an alarm, an authorised access or a fault.

The three statuses have different reporting priorities. The alarm is reported by the highest priority, followed by

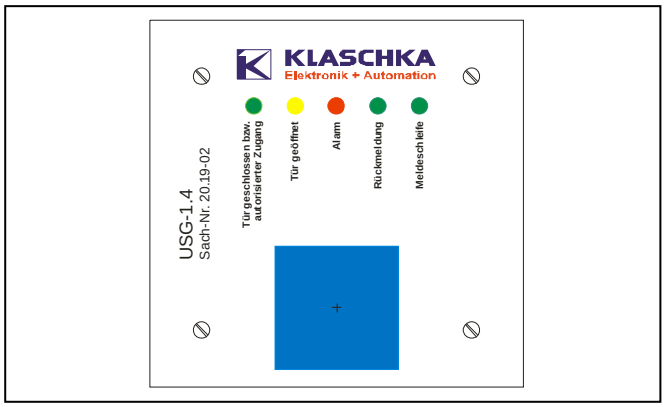

Figure 5: Evaluation device

error and finally the authorised access. If several participants report one of the three conditions, then the condition with the highest priority is reported. If there are two conditions with the same priority, the participant with the highest participant number is indicated.

6. Programming

The participant number, authorisation code and operating mode have to be programmed in the evaluation- and station controllers. The programming of the data simply takes place directly at the station controller or the evaluation device by means of different transponders.

7. Outputs

7.1. Switching Outputs, Evaluation Device

	Status			
Outputs	Manhole closed	Manhole opened	30 seconds opened	60 seconds opened
Warning	1	0	0	0
Alarm 30	1	1	0	0
Alarm 60	1	1	1	0

7.2. Switching Outputs, Station Controller

	Status			
Outputs	Manhole closed	Manhole opened	Manhole opened with authorisation	Error Participant defective
Y0	1	0	0	0
Y1	0	X	1	0
Y2	1	0	1	1

Y0: Switched-on, if all manholes are closed and there are feedbacks from all participants.
Y1: Switched-on, if one or more manholes are opened with authorisation.
Y2: Switched-on, if all manholes are closed or opened by authorisation.
Switched-off, if one or more manholes are opened without authorisation.

	Participants														
Outptus	1	2	3	4	5	6	7	8	9	A	B	C	D	E	F
Partic. Bit 0	1	0	1	0	1	0	1	0	1	0	1	0	1	0	1
Partic. Bit 1	0	1	1	0	0	1	1	0	0	1	1	0	0	1	1
Partic. Bit 2	0	0	0	1	1	1	1	0	0	0	0	1	1	1	1
Partic. Bit 3	0	0	0	0	0	0	0	1	1	1	1	1	1	1	1

8. Time Diagrams

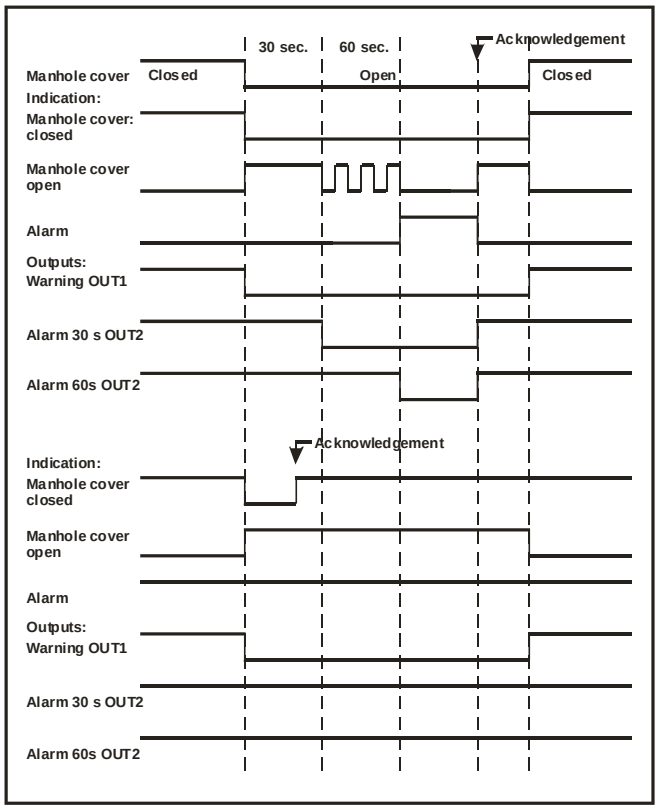

Time diagram: Evaluation device with switching output

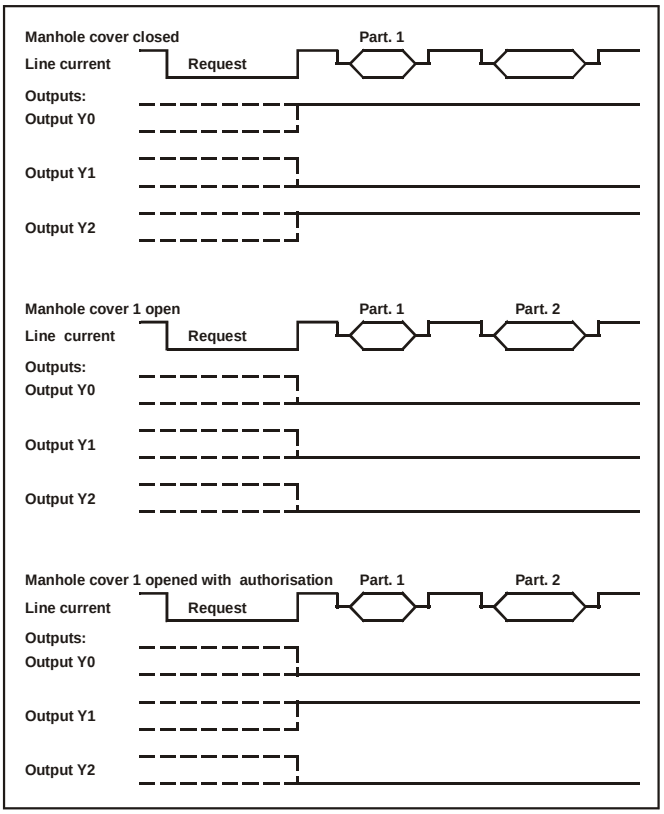

Time diagram: Line current interface

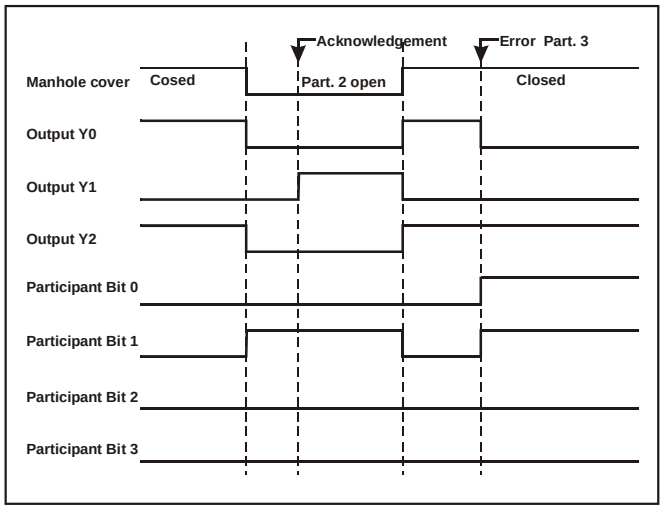

Time diagram: Station controller with switching output

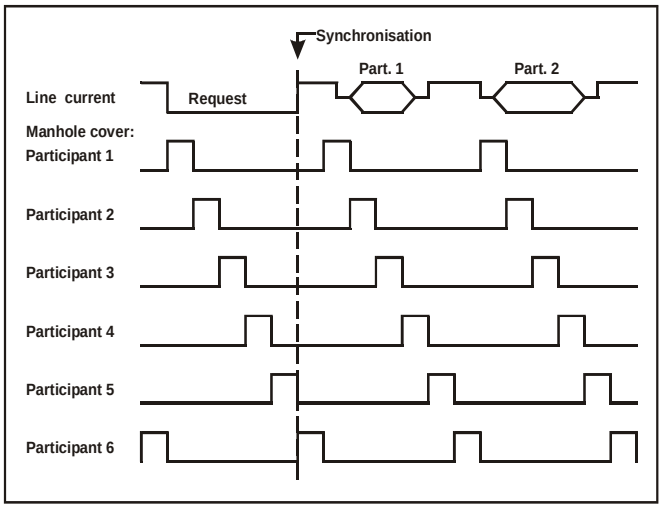

Time diagram: Manhole cover clocking